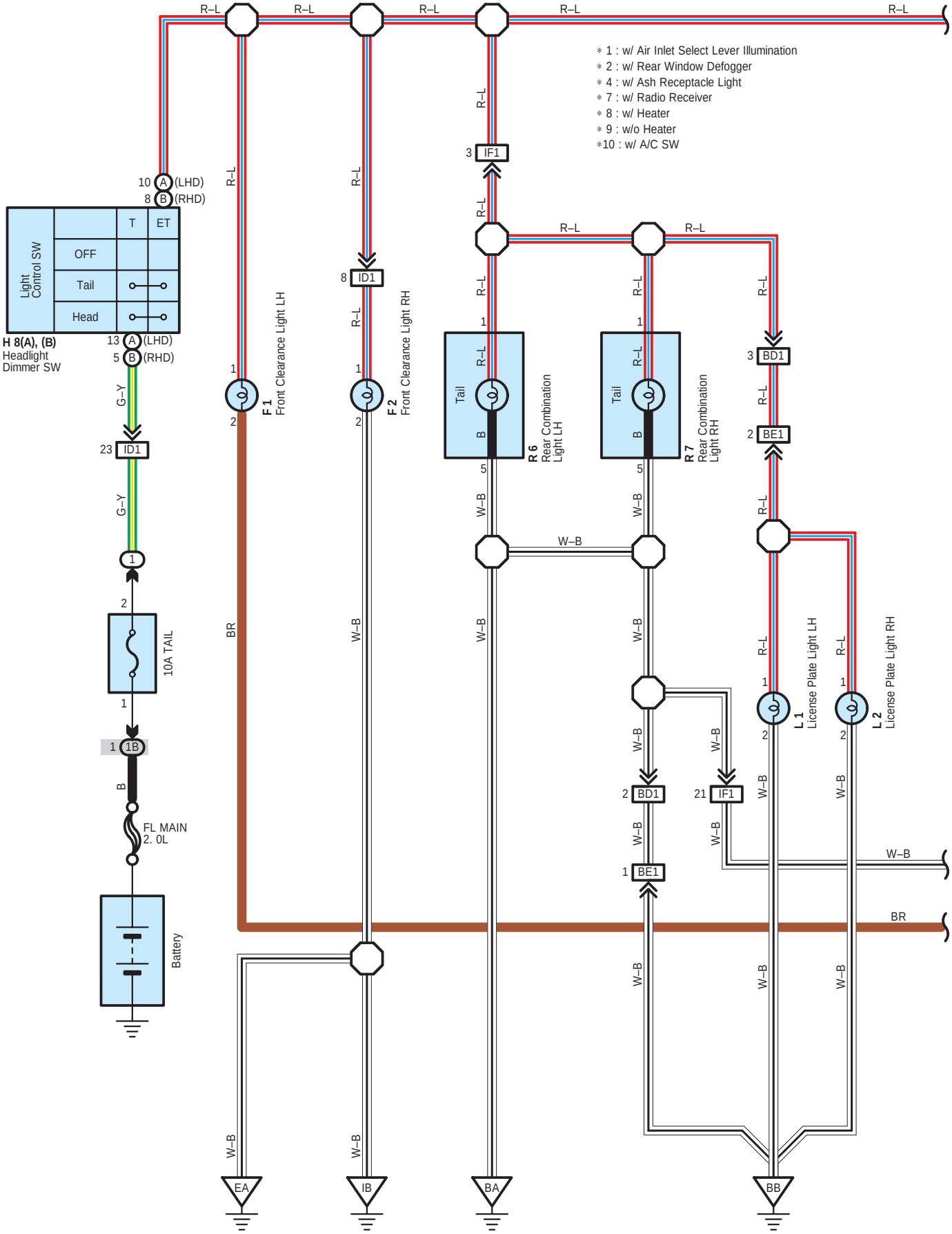
∗ 1 : w/ Air Inlet Select Lever Illumination
∗ 2 : w/ Rear Window Defogger
∗ 4 : w/ Ash Receptacle Light
∗ 7 : w/ Radio Receiver
∗ 8 : w/ Heater
∗ 9 : w/o Heater
∗10 : w/ A/C SW
Light Control SW
T
ET
OFF
Tail
Head
H 8(A), (B)
Headlight Dimmer SW
10 A (LHD)
8 B (RHD)
13 A (LHD)
5 B (RHD)
G–Y
23 ID1
10A TAIL
1B
B
FL MAIN
2. 0L
Battery
BR
F 1
Front Clearance Light LH
F 2
Front Clearance Light RH
8 ID1
3 IF1
R 6
Rear Combination Light LH
R 7
Rear Combination Light RH
Tail
3 BD1
2 BE1
2 BD1
1 BE1
21 IF1
L 1
License Plate Light LH
L 2
License Plate Light RH
R–L
W–B
EA
IB
BA
BB

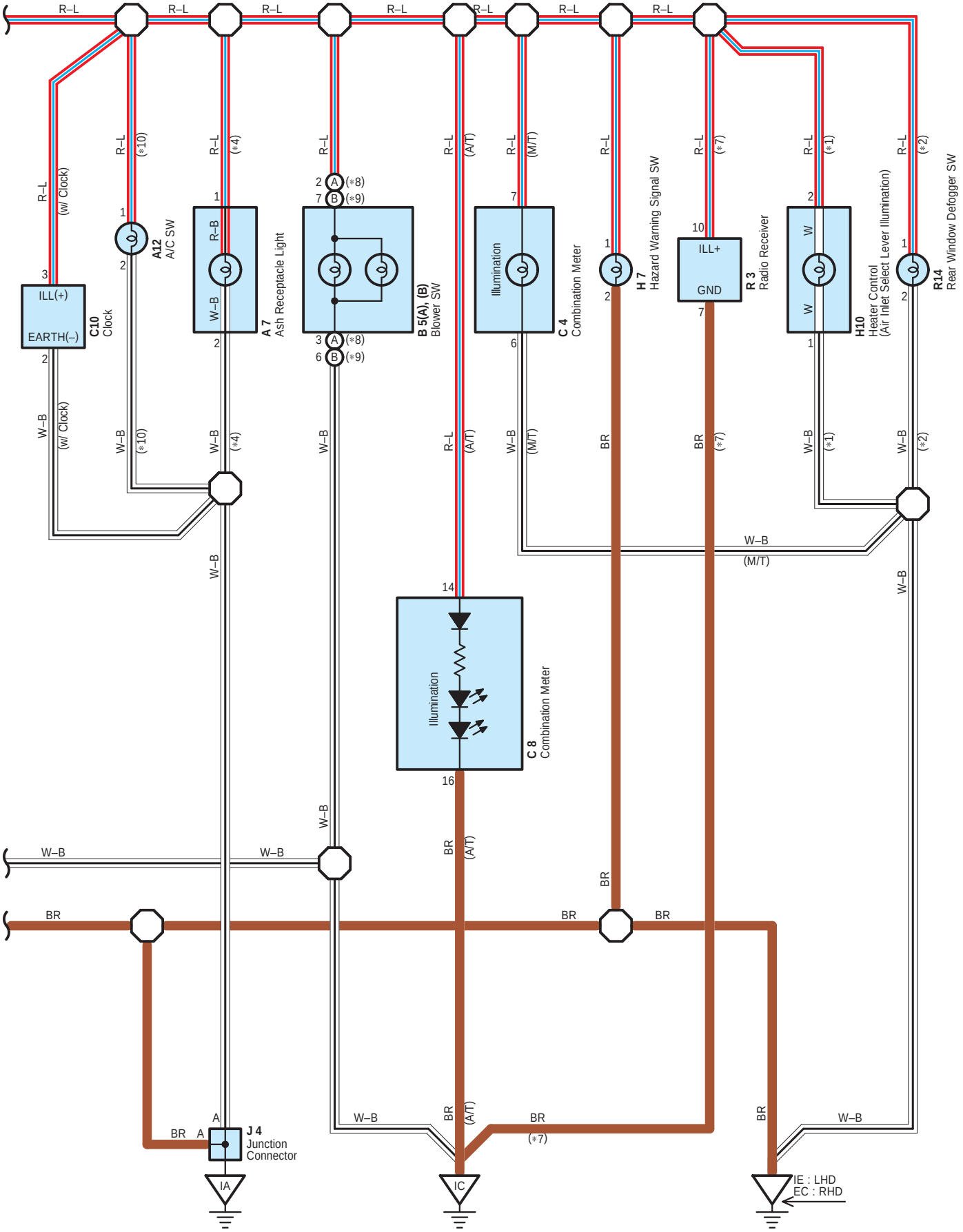
R–L
(w/ Clock)
(*10)
(*4)
(A/T)
(M/T)
(*7)
(*1)
(*2)
ILL(+)
EARTH(–)
C10
Clock
A12
A/C SW
R–B
W–B
A 7
Ash Receptacle Light
(*8)
(*9)
B 5(A), (B)
Blower SW
Illumination
C 4
Combination Meter
H 7
Hazard Warning Signal SW
ILL+
GND
R 3
Radio Receiver
W
H10
Heater Control
(Air Inlet Select Lever Illumination)
R14
Rear Window Defogger SW
C 8
Combination Meter
BR
J 4
Junction
Connector
IA
IC
IE : LHD
EC : RHD

: Parts Location

Code		See Page	Code		See Page	Code	See Page
A7		28 (LHD)	F1		24 (*1)	J4	37 (*5)
		36 (*5)			26 (*2)		39 (*6)
		38 (*6)			32 (*3)	L1	30 (LHD)
A12		28 (LHD)			34 (*4)		40 (RHD)
		36 (*5)	F2		24 (*1)	L2	30 (LHD)
B5	A	28 (LHD)			26 (*2)		40 (RHD)
		36 (*5)			32 (*3)	R3	29 (LHD)
	B	28 (LHD)			34 (*4)		37 (*5)
		38 (*6)	H7		28 (LHD)		39 (*6)
C4		28 (LHD)			36 (*5)	R6	31 (LHD)
		36 (*5)			38 (*6)		41 (RHD)
		38 (*6)	H8	A	28 (LHD)	R7	31 (LHD)
C8		28 (LHD)		B	36 (*5)		41 (RHD)
		38 (*6)			38 (*6)	R14	29 (LHD)
C10		28 (LHD)	H10		28 (LHD)		37 (*5)
		36 (*5)			36 (*5)		39 (*6)
		38 (*6)	J4		29 (LHD)		

: Relay Blocks

Code	See Page	Relay Blocks (Relay Block Location)
1	22	Engine Room R/B (Engine Compartment Right)

: Junction Block and Wire Harness Connector

Code	See Page	Junction Block and Wire Harness (Connector Location)
1B	22	Engine No.2 Wire and Engine Room J/B (Engine Compartment Right)

: Connector Joining Wire Harness and Wire Harness

Code	See Page	Joining Wire Harness and Wire Harness (Connector Location)
ID1	44 (LHD)	Engine Room Main Wire and Instrument Panel Wire (Right Kick Panel)
	48 (*5)	Engine Room Main Wire and Instrument Panel Wire (Cowl Side Panel RH)
	49 (*6)	
IF1	44 (LHD)	Instrument Panel Wire and Floor Wire (Left Kick Panel)
	48 (*5)	Instrument Panel Wire and Floor Wire (Right Kick Panel)
	49 (*6)	
BD1	45 (LHD)	Back Door No.2 Wire and Floor Wire (Rear Quarter Panel RH)
	50 (RHD)	
BE1	45 (LHD)	Back Door No.2 Wire and Back Door No.1 Wire (Right Side of Back Door)
	50 (RHD)	

* 1 : LHD 3SZ–VE * 2 : LHD K3–VE * 3 : RHD 3SZ–VE * 4 : RHD K3–VE * 5 : RHD w/ Heater * 6 : RHD w/o Heater

▽ : **Ground Points**

Code	See Page	Ground Points Location
EA	42 (*1)	Right Fender Apron
	43 (*2)	
	46 (*3)	
	47 (*4)	
EC	46 (*3)	Left Fender Apron
	47 (*4)	
IA	44 (LHD)	Right Kick Panel
	48 (*5)	Left Kick Panel
	49 (*6)	
IB	44 (LHD)	Cowl Side Panel RH
	48 (*5)	
	49 (*6)	
IC	44 (LHD)	Cowl Side Panel LH
	48 (*5)	Right Kick Panel
	49 (*6)	
IE	44 (LHD)	Cowl Side Panel LH
BA	45 (LHD)	Rear Quarter Panel RH
	50 (RHD)	
BB	45 (LHD)	Right Side of Back Door
	50 (RHD)	

* 1 : LHD 3SZ–VE * 2 : LHD K3–VE * 3 : RHD 3SZ–VE * 4 : RHD K3–VE * 5 : RHD w/ Heater * 6 : RHD w/o Heater